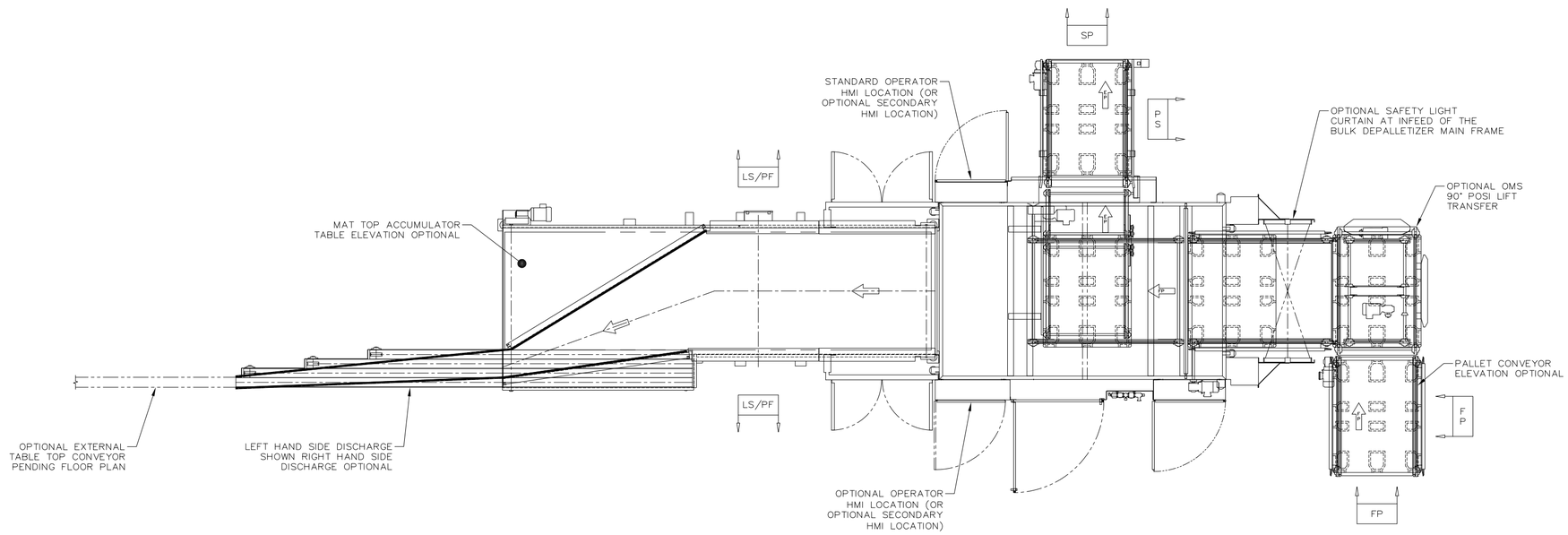

SPECIAL CONFIGURATIONS OF OPTIONAL EQUIPMENT AVAILABLE AS PER CUSTOMER REQUIREMENTS.

SYMBOL	DESCRIPTION
	PRODUCT FLOW
FP	FULL PALLET FLOW
EP	EMPTY PALLET FLOW
SP	SINGLE PALLET FORKLIFT ACCESS
LS/PF	LAYER SHEET AND PICTURE FRAME ACCESS
FP	FULL PALLET FORK LIFT ACCESS

NOTICE:
PROPRIETARY DATA IS INCLUDED IN THE INFORMATION DISCLOSED HEREIN, WHETHER TRANSMITTED VIA THIS DOCUMENT OR BY ANY ELECTRONIC MEANS AND IS THE SOLE PROPERTY OF OUELLETTE MACHINERY SYSTEMS, INC. THIS INFORMATION IS SUBMITTED IN CONFIDENCE AND NEITHER THIS DOCUMENT NOR THE INFORMATION DISCLOSED HEREIN SHALL BE REPRODUCED OR TRANSFERRED TO OTHER DOCUMENTS OR USED OR DISCLOSED TO OTHERS FOR ANY PURPOSE EXCEPT AS SPECIFICALLY AUTHORIZED BY OUELLETTE MACHINERY SYSTEMS, INC. RECEIPT OF THIS DOCUMENT SHALL BE DEEMED TO BE ACCEPTANCE OF THE CONDITIONS SPECIFIED HEREIN.

OUELLETTE MACHINERY SYSTEMS INC.
1761 Chase Drive
Fenton (St.Louis), MO
63026
Phone: (636) 343-7200
Fax: (636) 326-0249
Website: www.omsinc.net
email: sales@omsinc.net

O.M.S. BULK DEPALLETIZER
MODEL: BKD–104–875–ST
SHOWN WITH SEMI AUTOMATIC OPTIONS

DSG. BY	DWN. BY	CHK. BY	SCALE	DATE DRAWN
RO	RO	RO	1/4" = 1'	01–26–87

REV. LTR.	DATE REV.	REV. BY	CHK. BY	PRINT #	CAD #	SHEET	
D	06–22–10	RO	RO		TEMP0816	3	24